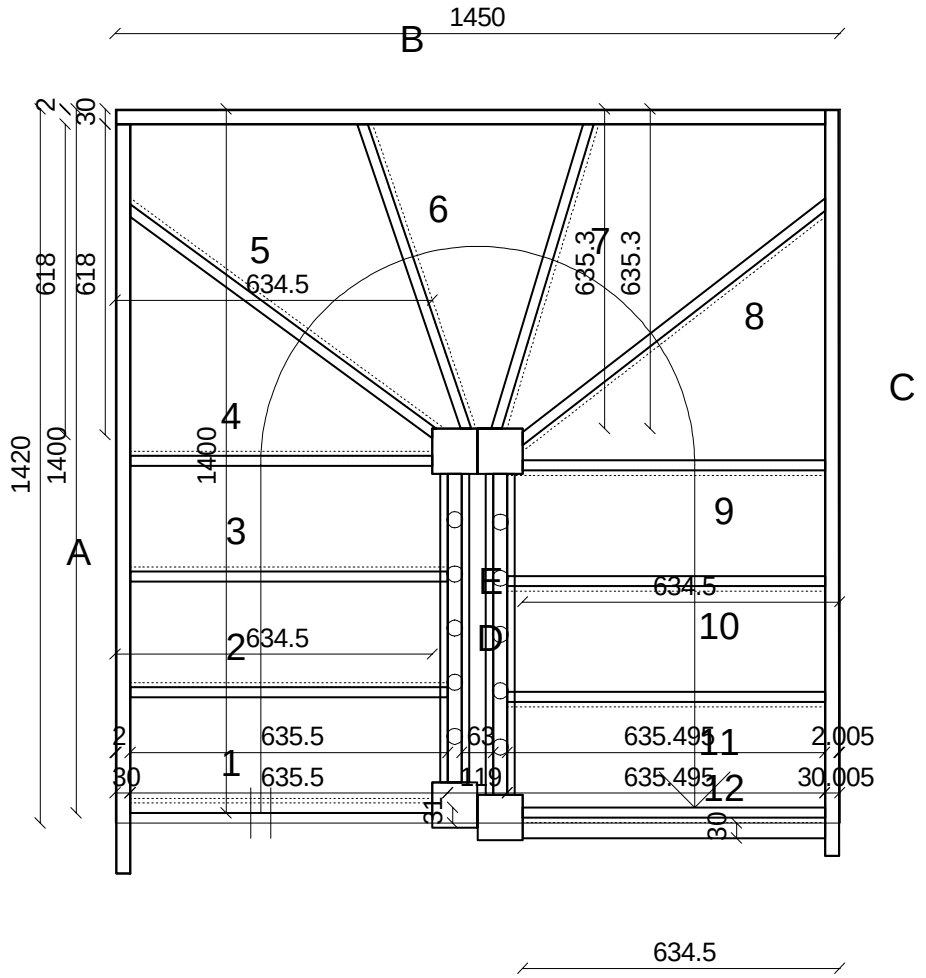

Floor Height:	2480.000 mm
Floor Depth Above:	0.000 mm
Floor Depth Below:	0.000 mm
Joist Depth:	225.000 mm
Headroom:	2066.304 mm
Pitch Of Stair:	41.94 °
Run:	230.000 mm
Rise:	206.667 mm
Tread Thickness:	22.000 mm
String Faceside:	28.000 mm
String Offside:	28.000 mm
Posts Dimensions	
Entry:	90.000*90.000
Corner:	90.000*90.000
Exit:	90.000*90.000

Material	
Strings:	Pine
Treads:	Pine
Riser:	9.6mm Plywood
Posts:	Pine 90 Square Newels
Handrails:	Pine
Baluster	GM090PU

Client: -------- -------- -------- -------- --------

Stairplan Ltd

Order:	Web Page	Run:	6 WINDER N	Scale:	1 : 15.00
Project:	--------	Stair:	NS3W53N	17.12.03	16:40